HOMMAGE BUILT-IN WASHBASIN RECTANGLE

PRODUCT INFORMATION

Article title	Villeroy & Boch Hommage Built-in washbasin, 630 x 525 x 203 mm, White Alpin CeramicPlus, with overflow, unground
Article number	7102A1R1
Assembly / Assembly type	built-in installation
Scope of delivery	1 x built-in washbasin , 1 x cut-out template
Depth in mm	525
Width in mm	630
Height in mm	203
Interior depth	150
Collection	Hommage
Suitable for	3-hole mixer, Matching Villeroy&Boch furniture
Material	Sanitary ceramics
surface	glossy
Colour name	White Alpin CeramicPlus
With overflow	Yes
Shape	Rectangle
Colour designation	White Alpin
Antibacterial surface (with AntiBac)	No
Easy surface cleaning (CeramicPlus)	Yes
Number of tap holes punched through	3
Underside of washbasin	unground
Number of bowls	1

TECHNICAL DRAWINGS

7102A1R1

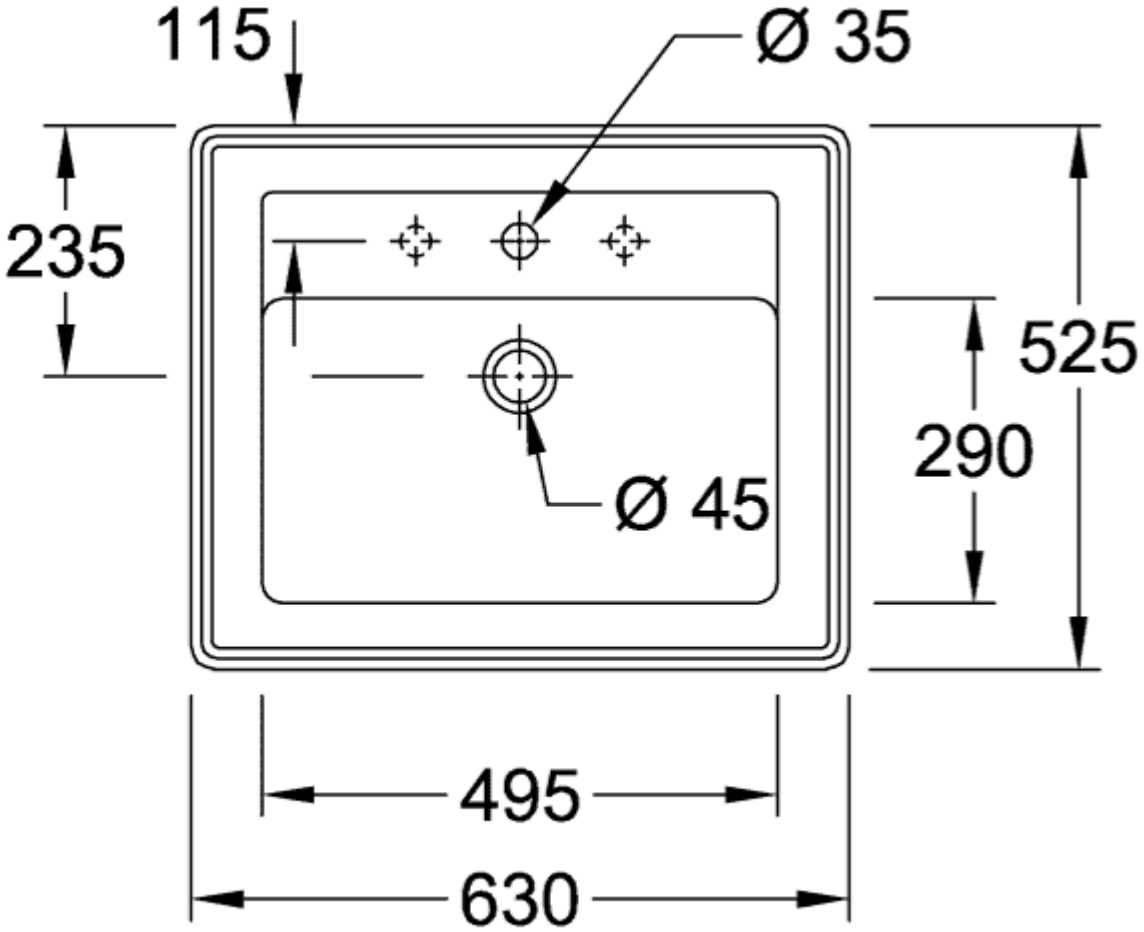
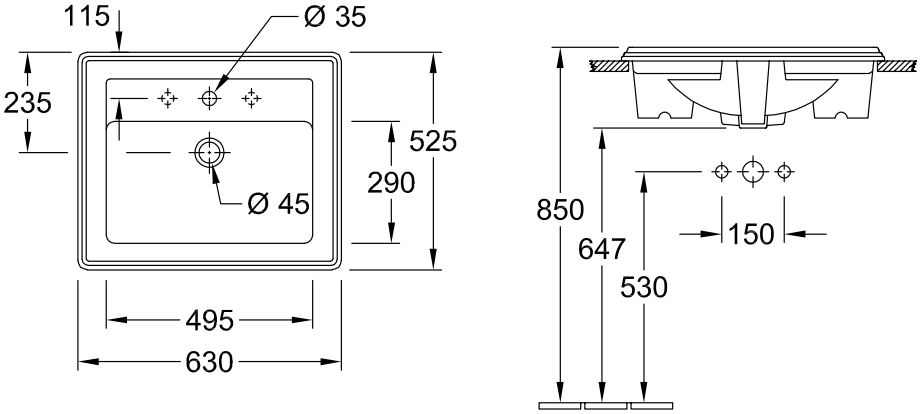
7102A1R1