SILUET 50 S FLAT FLUSH-MOUNTED SINK RECTANGLE

PRODUCT INFORMATION

Article title	Villeroy & Boch Siluet 50 S flat Flush-mounted sink, included Waste system hand-operated, of TitanCeram, 470 x 470 mm, White Alpin CeramicPlus
Article number	33451FR1
Assembly / Assembly type	flush-fitting installation
Assembly instructions	minimum unit width: 50 cm
Scope of delivery	1 x sink , 1 x basket strainer waste
Length in mm	470
Width in mm	470
Height in mm	220
Interior depth	200
Collection	Siluet 50 S flat
Material	TitanCeram
Colour name	White Alpin CeramicPlus
Other material	Grate: Stainless steel Valve: Stainless steel
Design Awards	KitchenInnovation of the Year® 2018
Function of the drain fitting	basket strainer waste
Colour designation	White Alpin
Other colour designations	Grate: Chrome, Valve: Chrome

TECHNICAL DRAWINGS

33451FR1

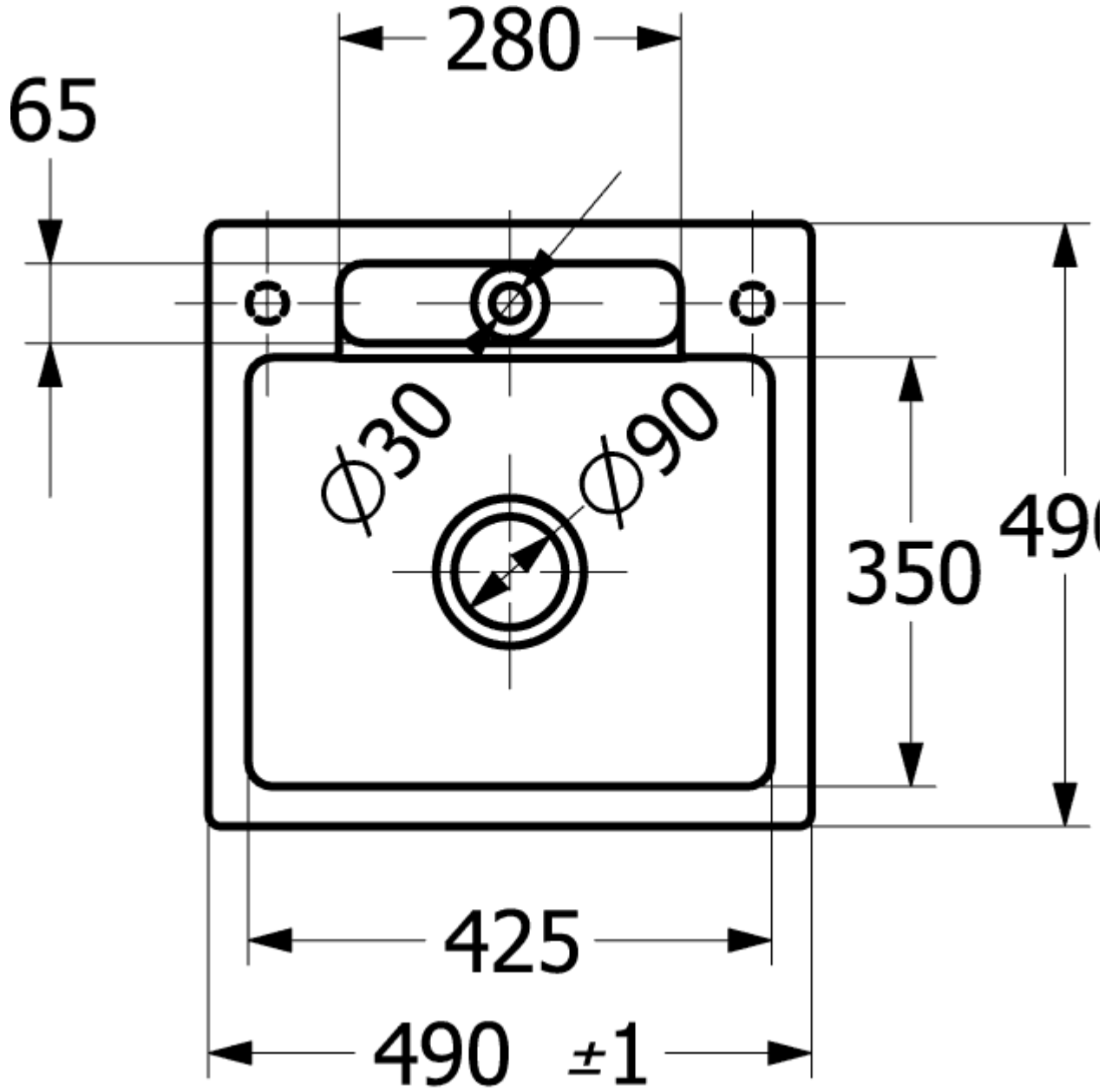
280
65
Ø30
Ø90
350
425
490 ±1

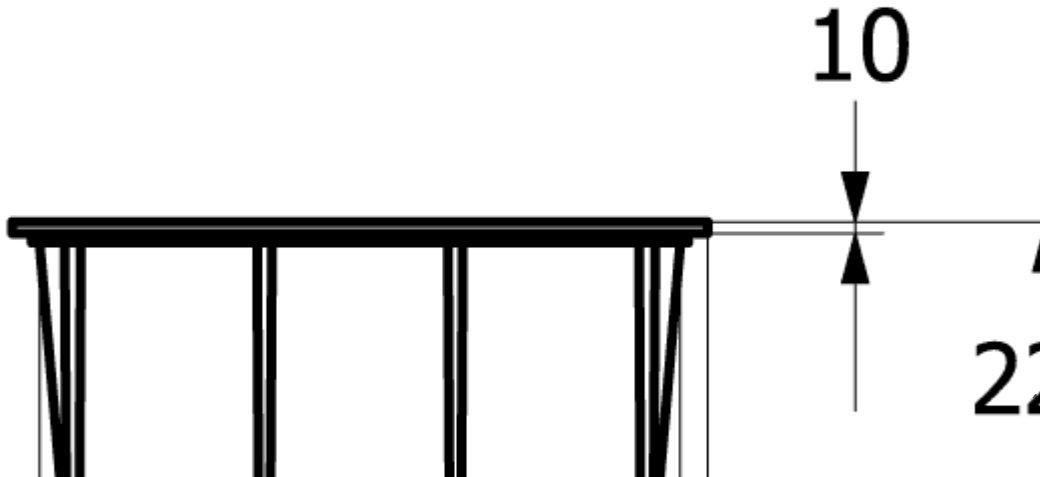
10
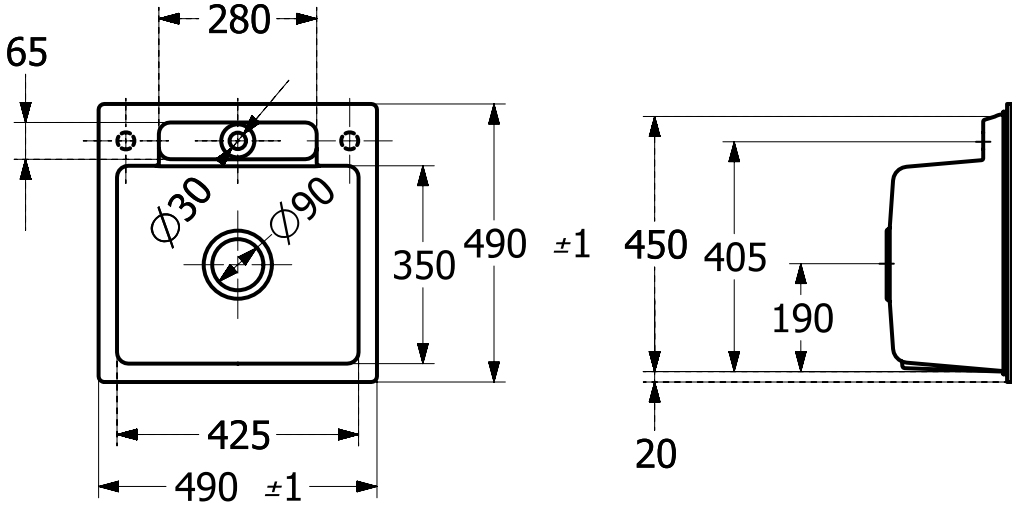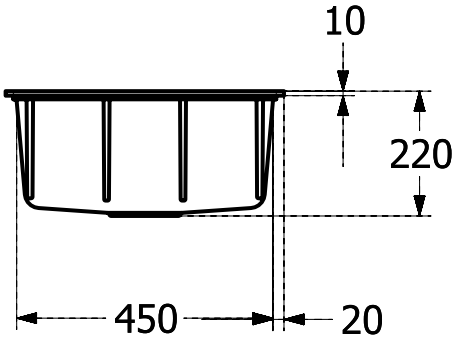
33451FR1