SUBWAY 60 XL FLAT FLUSH-MOUNTED SINK RECTANGLE

PRODUCT INFORMATION

Article title	Villeroy & Boch Subway 60 XL flat Flush-mounted sink, included Waste system hand-operated, of Ceramic, 965 x 475 mm, Stone White CeramicPlus
Article number	67191FRW
Assembly / Assembly type	flush-fitting installation
Assembly instructions	minimum unit width: 60 cm, For flush-fit installation in natural stone or artificial stone countertops| Minimum thickness of the countertop when placed with a dishwasher: at least 4 cm
Scope of delivery	1 x sink , 1 x basket strainer waste
Length in mm	475
Width in mm	965
Height in mm	220
Interior depth	200
Collection	Subway 60 XL flat
Material	Ceramic
Colour name	Stone White CeramicPlus
Other material	Grate: Stainless steel Valve: Stainless steel
Position of main bowl	Basin on right
Function of the drain fitting	basket strainer waste
Colour designation	Stone White
Other colour designations	Grate: Chrome, Valve: Chrome

TECHNICAL DRAWINGS

67191FRW

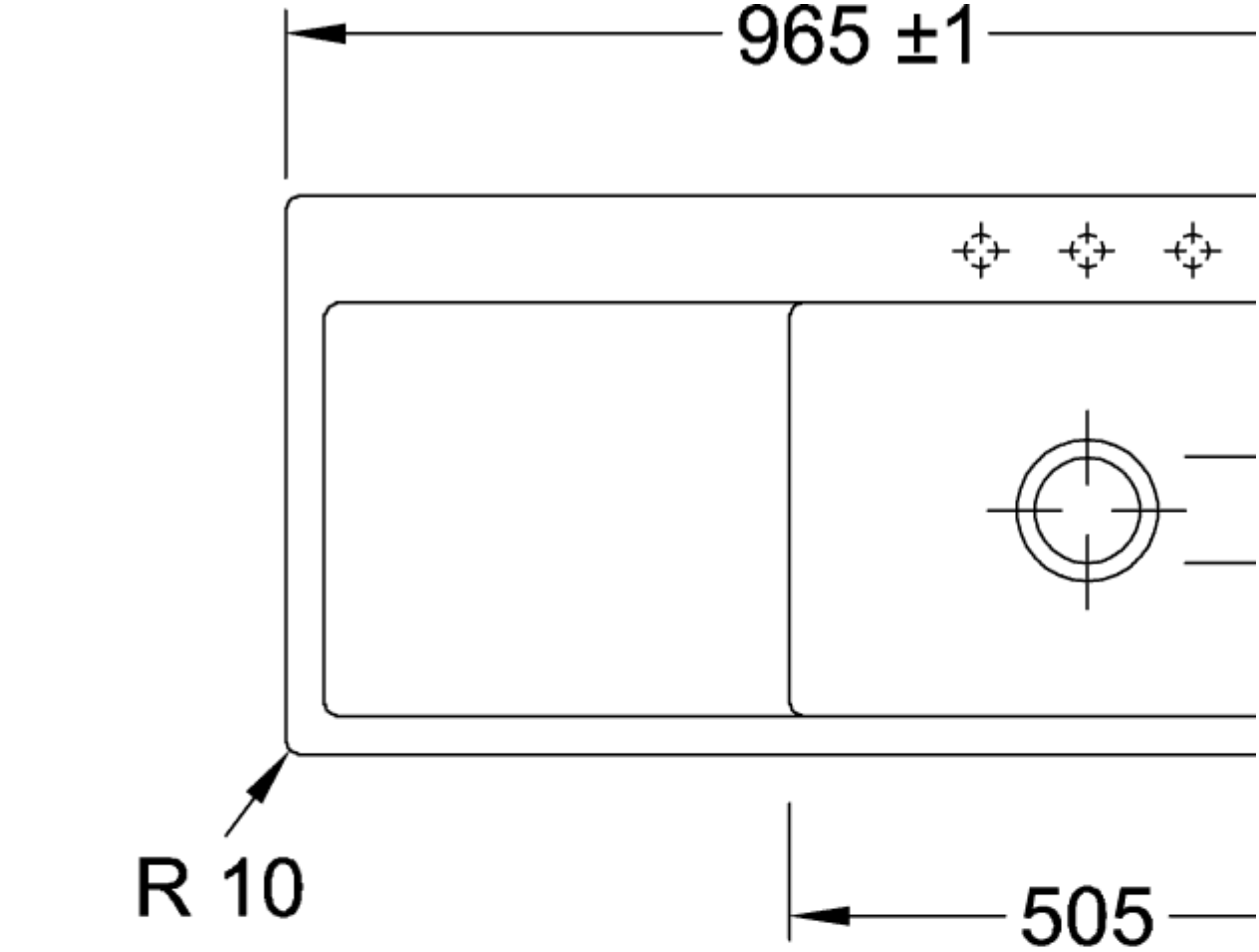

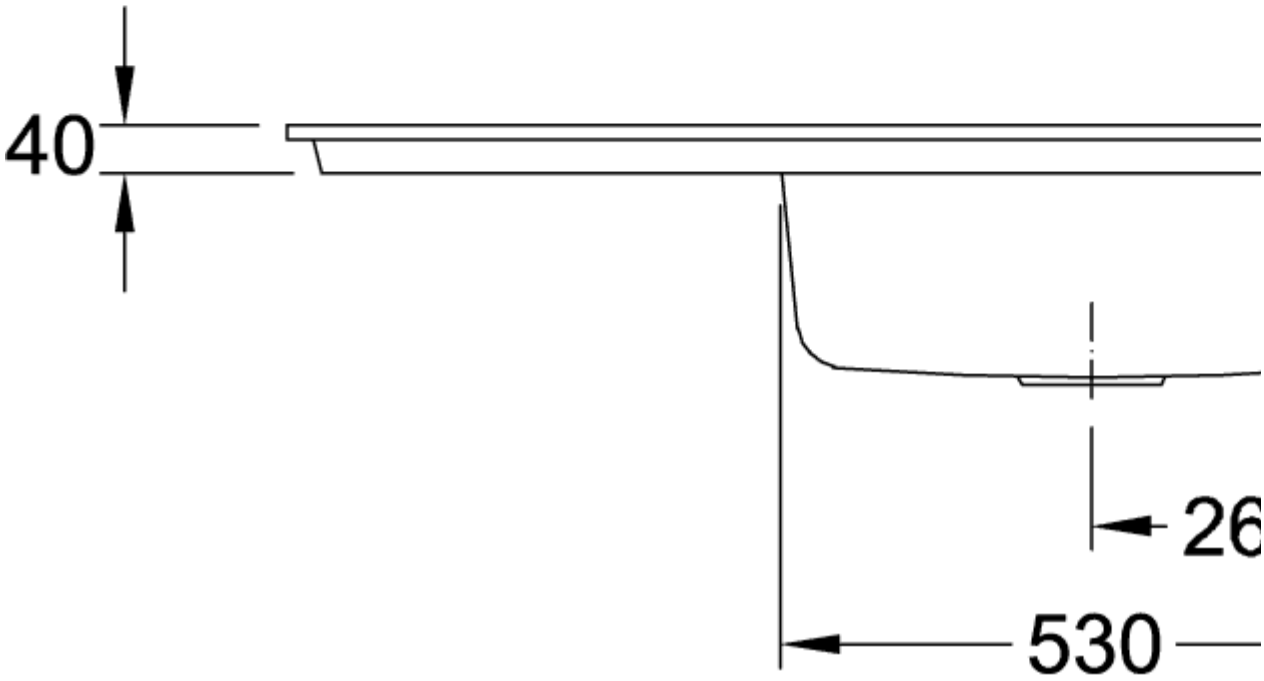
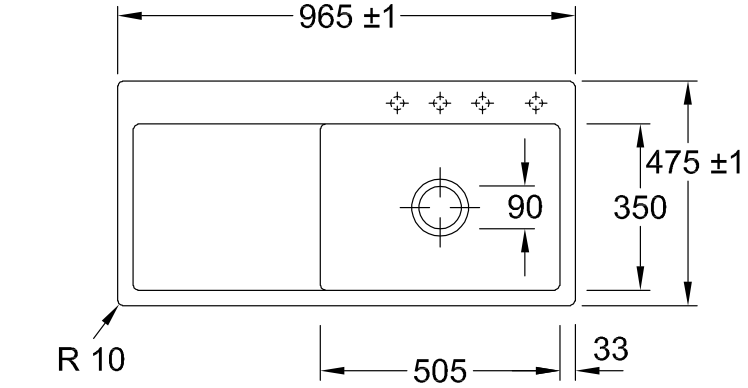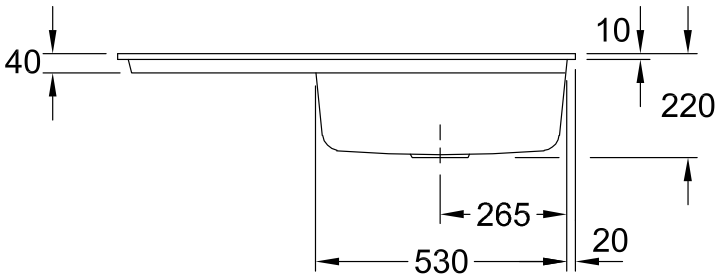
67191FRW