SUBWAY 45 FLAT FLUSH-MOUNTED SINK RECTANGLE

PRODUCT INFORMATION

Article title	Villeroy & Boch Subway 45 flat Flush-mounted sink, included Waste system pop-up, of Ceramic, 745 x 475 mm, Snow White CeramicPlus
Article number	67722FKG
Assembly / Assembly type	flush-fitting installation
Assembly instructions	minimum unit width: 45 cm, Minimum thickness of the countertop when placed with a dishwasher: at least 4 cm|For flush-fit installation in natural stone or artificial stone countertops
Scope of delivery	1 x sink , 1 x pop-up waste system 1 x cover cap, round
Length in mm	475
Width in mm	745
Height in mm	220
Interior depth	200
Collection	Subway 45 flat
Material	Ceramic
Colour name	Snow White CeramicPlus
Other material	Grate: Stainless steel Valve: Stainless steel
Position of main bowl	Basin on left
Function of the drain fitting	pop-up waste system
Colour designation	Snow White
Other colour designations	Grate: Chrome, Valve: Chrome

TECHNICAL DRAWINGS

67722FKG

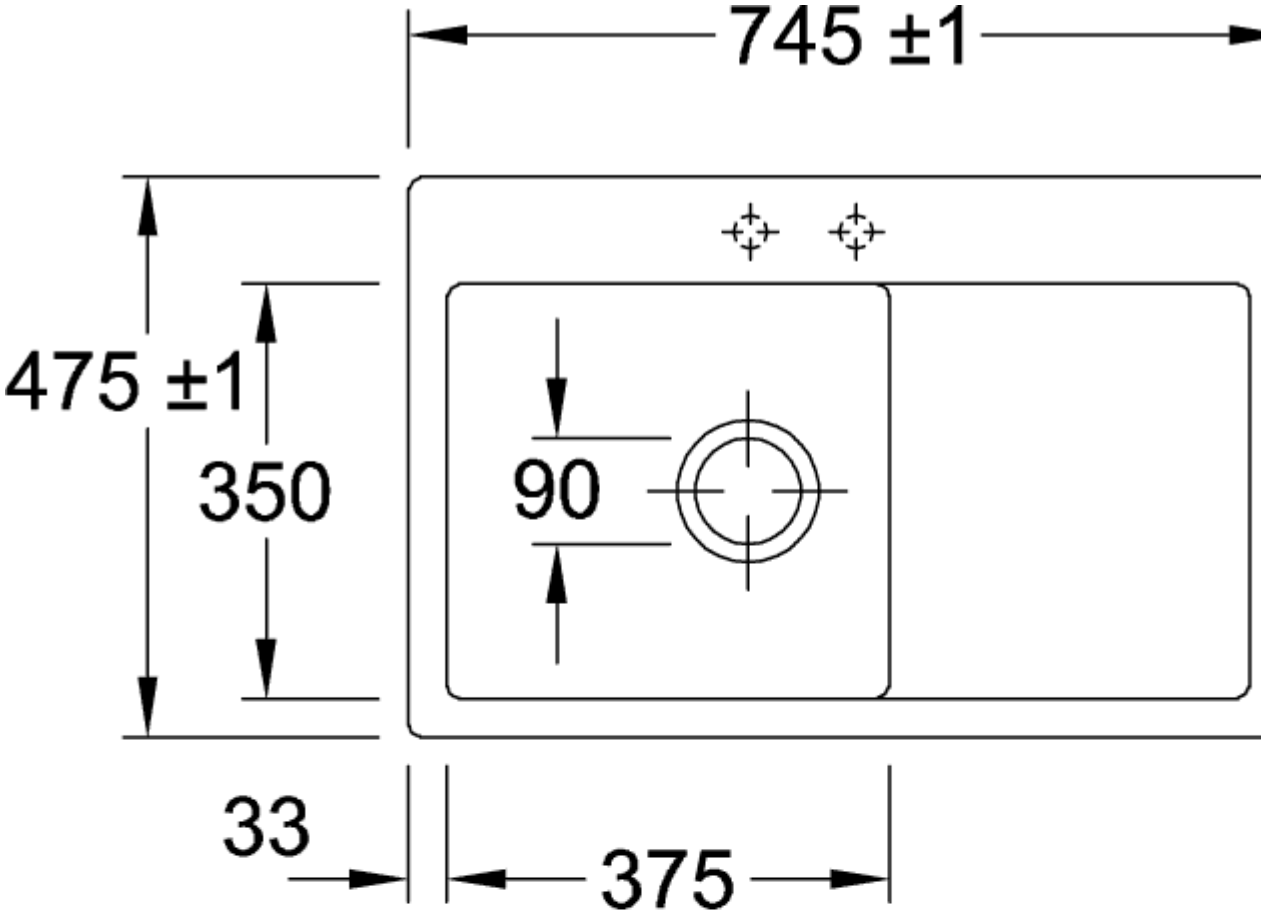

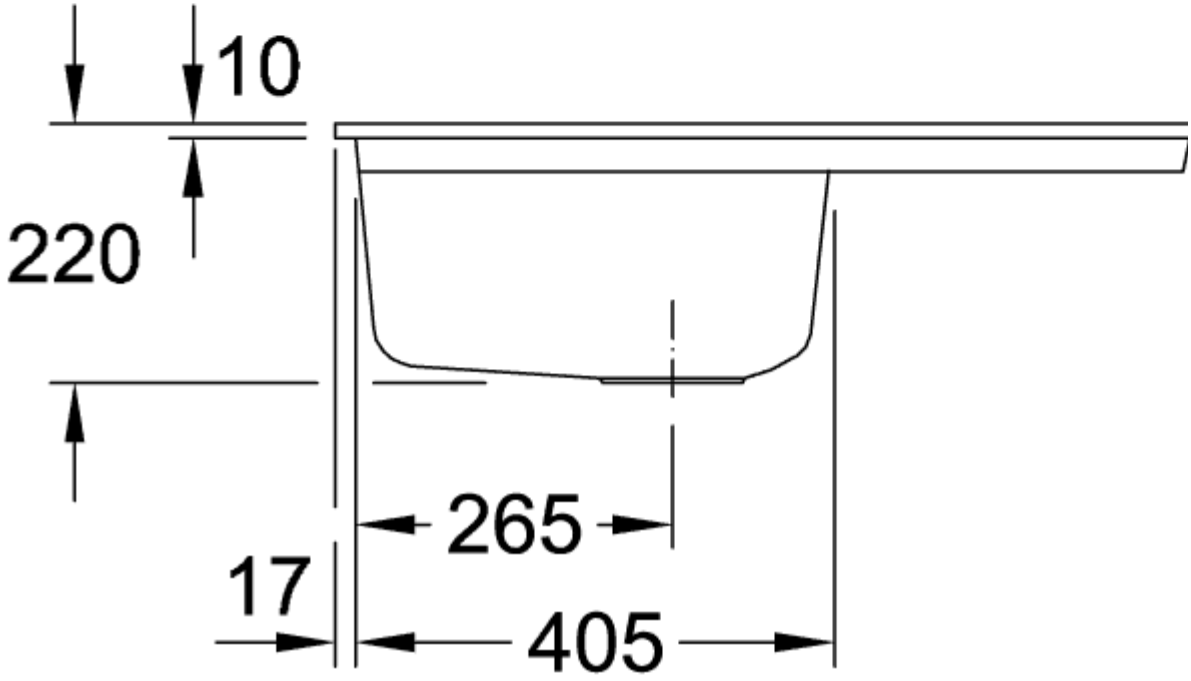
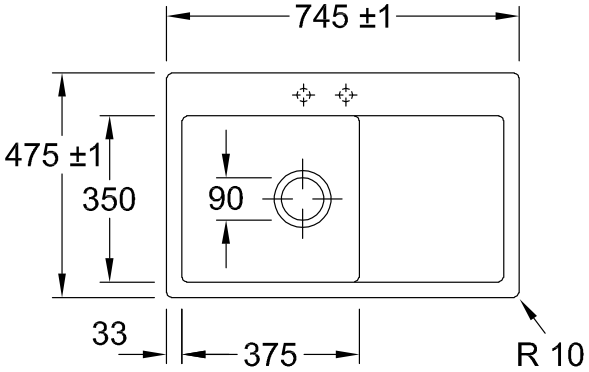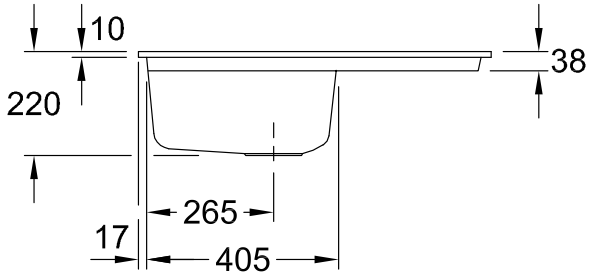
67722FKG