MODERN STEEL LOW PRESSURE KITCHEN TAP

PRODUCT INFORMATION

Article title	Villeroy & Boch Modern Steel Low pressure Kitchen tap, of Stainless steel, Solid stainless steel
Article number	966811LC
Assembly / Assembly type	Pillar tap
Assembly instructions	Tap fitting can be installed directly in front of a wall as the water temperature is regulated within a 90° range towards the sink
Scope of delivery	1 x tap fitting , 1 x set of connecting hoses 1 x fastening set 1 x installation instructions 1 x care tips
Length in mm	243
Width in mm	45
Height in mm	315
Collection	Modern Steel Low pressure
Material	Stainless steel
surface	matt
Colour name	Solid stainless steel
Technical information	Material: solid stainless steel, | Cartridge material: plastic, ceramic gaskets||Swivel range: 360°|| Opening angle of lever: 25°||Tap can be installed directly in front of a wall as the water temperature is regulated within a 90° range towards the sink||Flow volume comfort jet: 11.9 l/min||Flexible connection hoses, length 600 mm
Length of spout in mm	200
Colour designation	Solid stainless steel
Low pressure	Yes

TECHNICAL DRAWINGS

966811LC

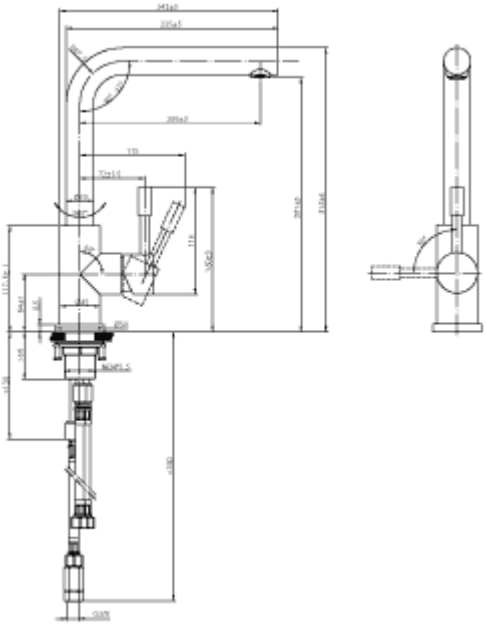
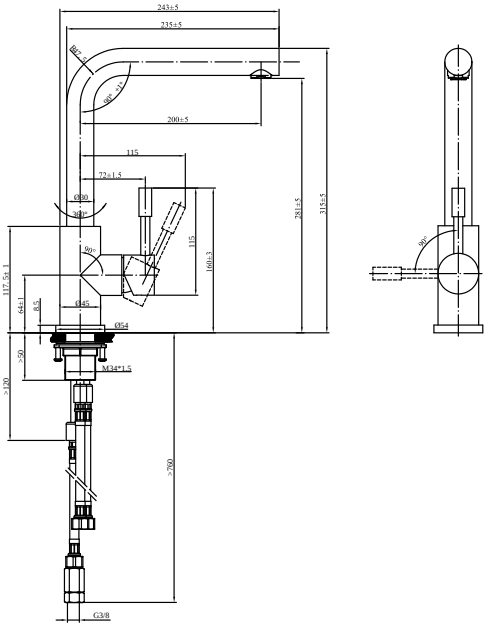
966811LC