TIMELINE 50 BUILT-IN SINK RECTANGLE

PRODUCT INFORMATION

Article title	Villeroy & Boch Timeline 50 Built-in sink, included Waste system pop-up, of Ceramic, 900 x 510 mm, Graphite CeramicPlus
Article number	330702i4
Assembly / Assembly type	surface-mounted installation
Assembly instructions	minimum unit width: 50 cm
Scope of delivery	1 x sink , 1 x pop-up waste system 1 x cover cap, round
Length in mm	510
Width in mm	900
Height in mm	220
Interior depth	200
Collection	Timeline 50
Material	Ceramic
Colour name	Graphite CeramicPlus
Other material	Grate: Stainless steel Valve: Stainless steel
Position of main bowl	Basin, reversible
Function of the drain fitting	pop-up waste system
Colour designation	Graphite
Other colour designations	Grate: Chrome, Valve: Chrome

TECHNICAL DRAWINGS

330702i4

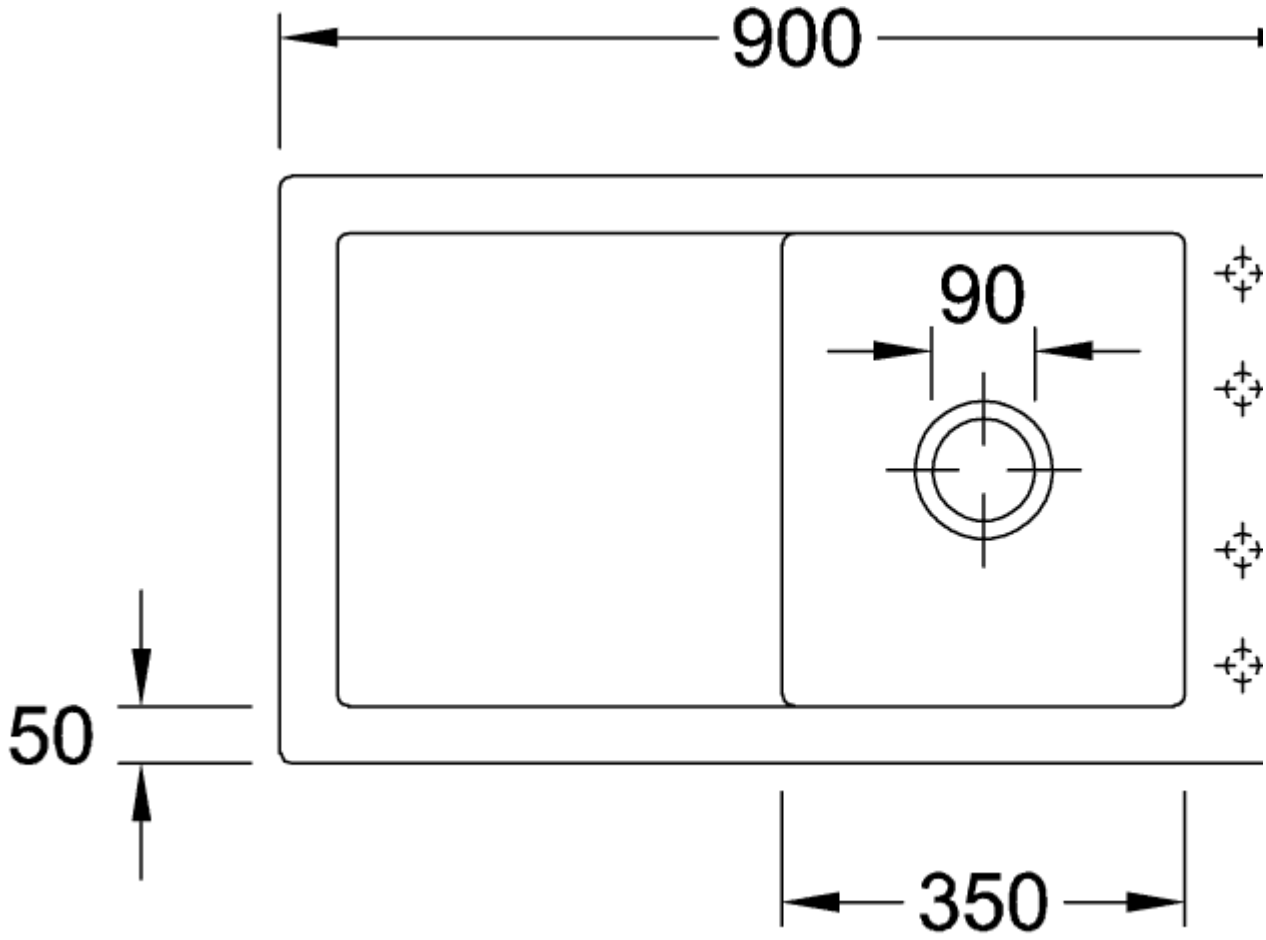
900
90
50
350

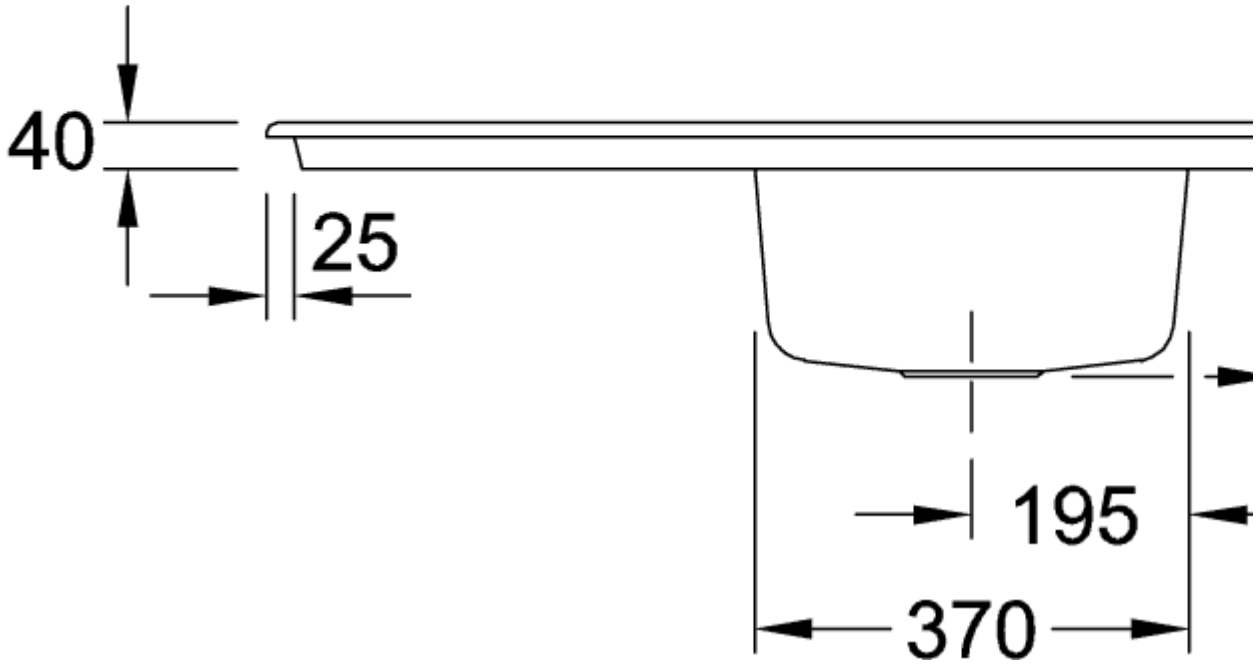
40
25
195
370
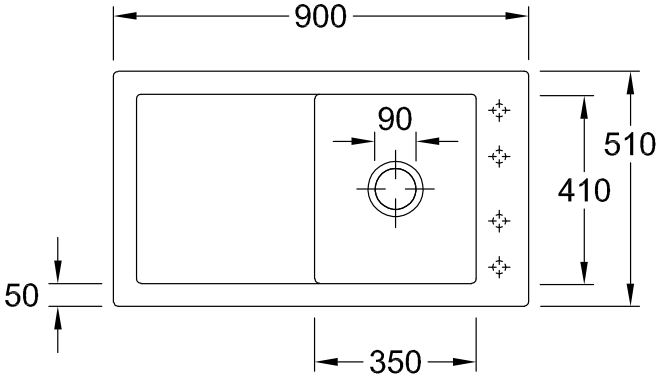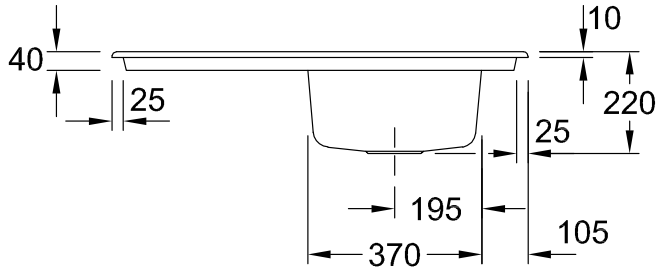
330702i4