SILUET 60 R BUILT-IN SINK RECTANGLE

PRODUCT INFORMATION

Article title	Villeroy & Boch Siluet 60 R Built-in sink, included Waste system hand-operated, of TitanCeram, 1000 x 510 mm, White Alpin CeramicPlus
Article number	333701R1
Assembly / Assembly type	surface-mounted installation
Assembly instructions	minimum unit width: 60 cm
Scope of delivery	1 x sink , 1 x basket strainer waste
Length in mm	510
Width in mm	1000
Height in mm	220
Interior depth	200
Collection	Siluet 60 R
Material	TitanCeram
Colour name	White Alpin CeramicPlus
Other material	Grate: Stainless steel Valve: Stainless steel
Position of main bowl	Basin, reversible
Function of the drain fitting	basket strainer waste
Colour designation	White Alpin
Other colour designations	Grate: Chrome, Valve: Chrome

TECHNICAL DRAWINGS

333701R1

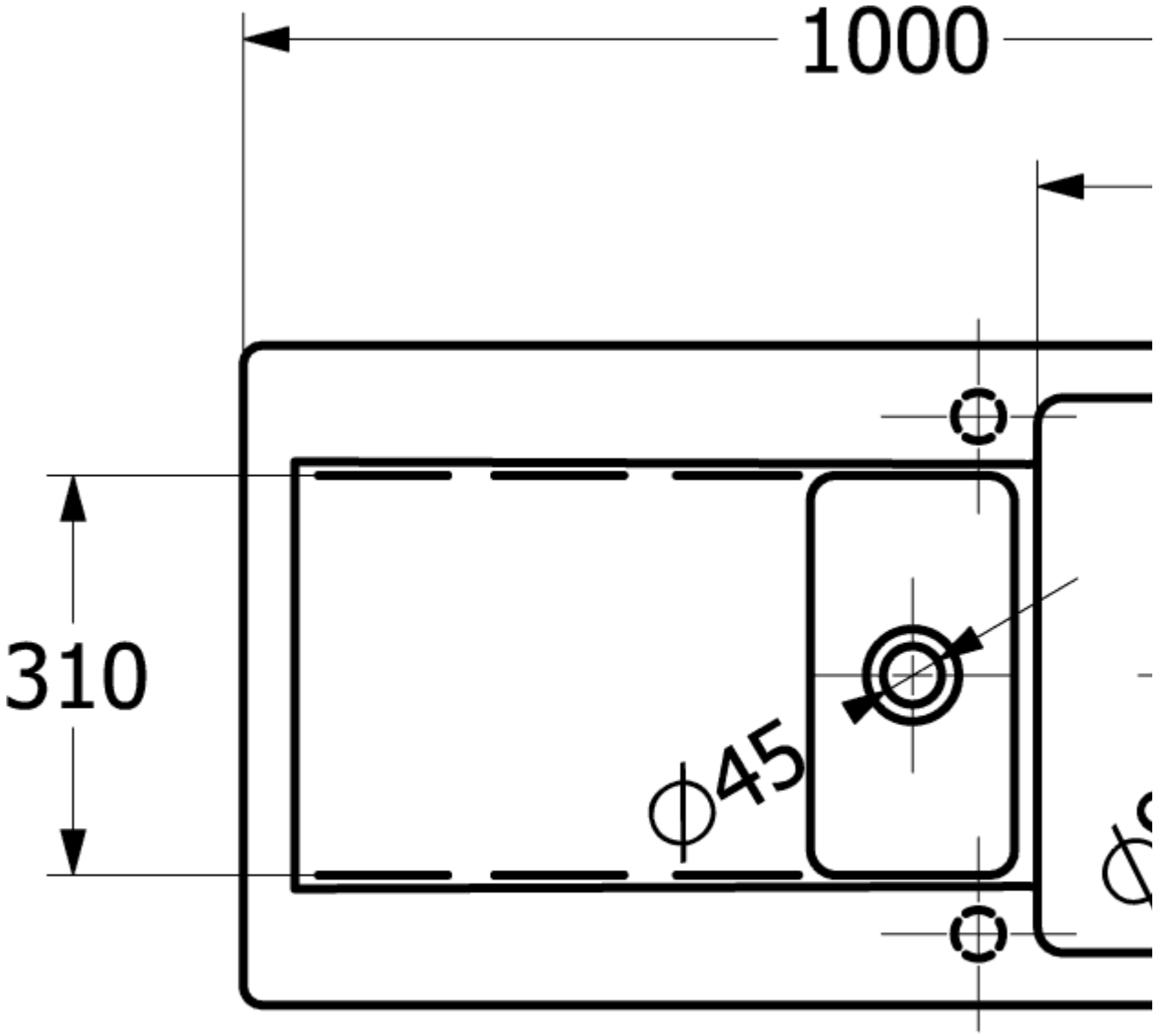
1000
310
ϕ45

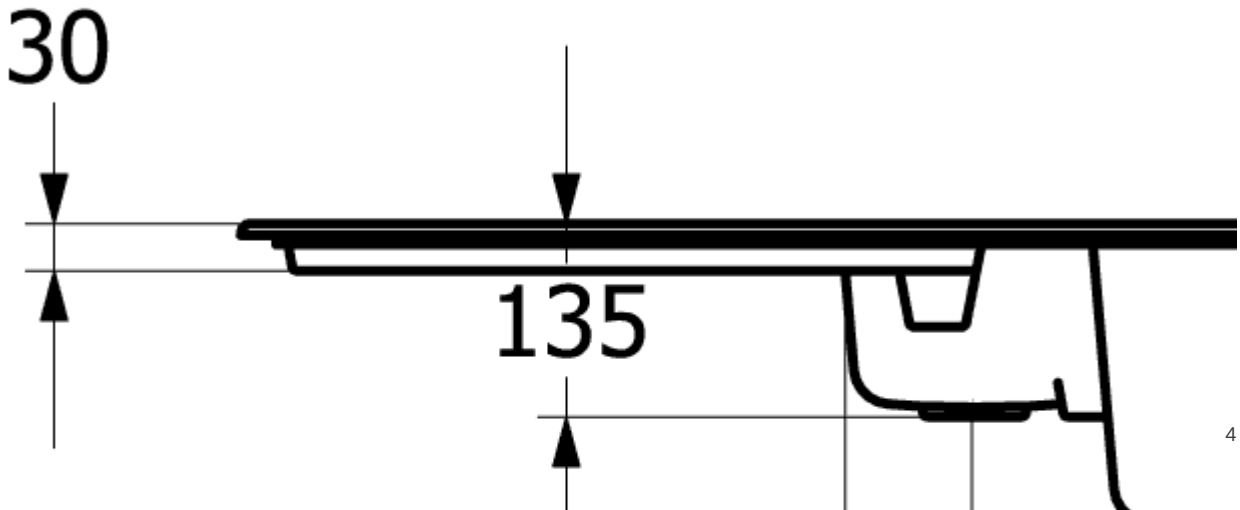
30
135
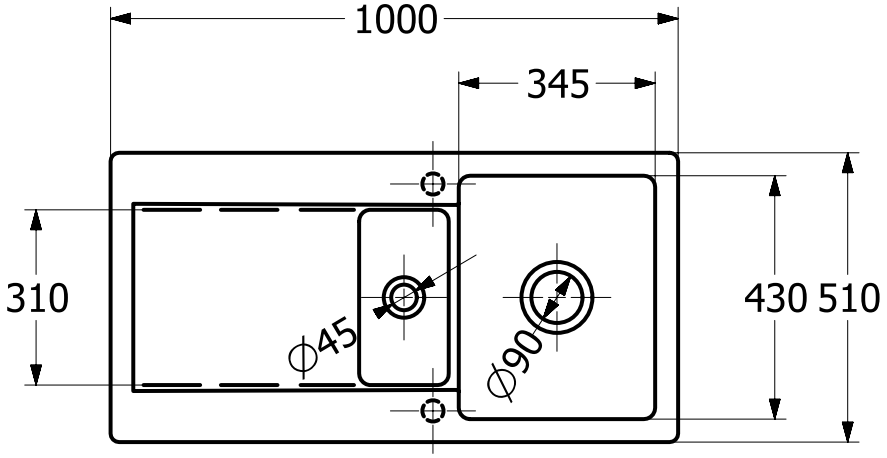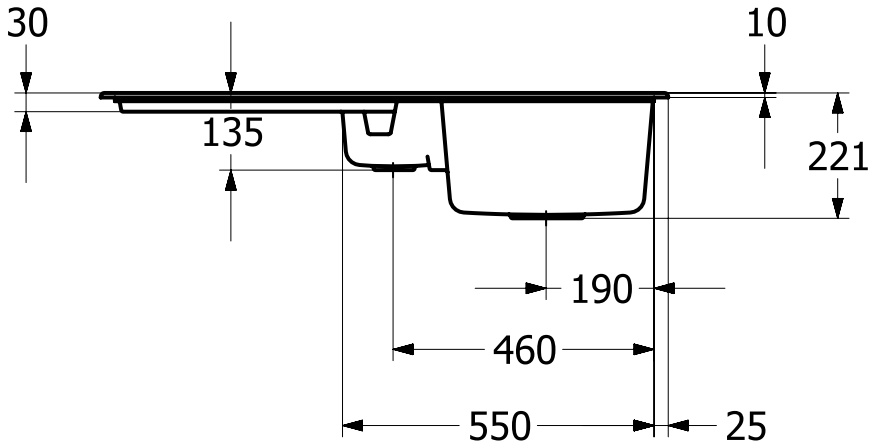
333701R1